2007 SUSPENSION

Wheels and Tires - Five Hundred, Freestyle & Montego

SPECIFICATIONS

GENERAL SPECIFICATIONS

Item	Specification
Lubricant	
Silicone Brake Caliper Grease and Dielectric Compound XG-3-A	ESE-M1C171-A
Cleaners	
Wheel and Tire Cleaner ZC-37-A, -B, -C	-
Wheel Runout	
Lateral (aluminum)	2.0 mm (0.08 in)
Radial (aluminum)	1.5 mm (0.06 in)
Lateral (steel)	2.0 mm (0.08 in)
Radial (steel)	1.5 mm (0.06 in)
Tire Balance Weight	
Maximum balance weight (total of inner and outer wheel flange)	140 g (5.0 oz) per wheel 70 g (2.5 oz) per flange
Tire Inflation	
Tires	See safety certification sticker located on driver door jamb.

TORQUE SPECIFICATIONS

Description	Nm	lb-ft
Wheel nuts[a]	133	98

[a] Torque specifications are for clean, dry bolt and nut threads. Never use oil or grease on wheel bolts or nuts.

DESCRIPTION AND OPERATION

WHEELS AND TIRES

Safety Precautions

WARNING: Never run the engine with one wheel off the ground; for example, when changing a tire. The wheel(s) resting on the ground can cause the vehicle to move. Failure to follow these instructions may result in personal injury.

WARNING: The tire and wheel must always be correctly matched. It is very important to determine the size of each component before any assembly operations

commence. Failure to follow these instructions can result in an explosive separation and result in personal injury.

WARNING: Aftermarket aerosol tire sealants are extremely flammable. Always question the customer to make sure these products have not been used. Failure to follow these instructions may result in personal injury.

WARNING: Aftermarket wheel assemblies may not be compatible with the vehicle. Use of incompatible wheel assemblies can result in equipment failure. Use only approved wheel assemblies. Failure to follow these instructions may result in personal injury.

WARNING: Use only wheels and wheel nuts that have been designed for current year Ford vehicles. Aftermarket wheels or wheel nuts may not fit or function correctly. Failure to follow these instructions may result in personal injury.

WARNING: Always wear safety goggles or a face shield when performing any work with wheel and tire assemblies. Failure to follow these instructions may result in personal injury.

CAUTION: Do not clean aluminum wheels with steel wool, abrasive-type cleaners or strong detergents. Use the specified wheel and tire cleaner or equivalent.

CAUTION: Reduce the air pressure as much as possible by pushing the valve core plunger in prior to removing the valve core. Avoid working in a position in which the face or body is directly over a tire in which there is pressure.

When carrying out any inspection or repair procedures on wheels and tires, follow the preceding safety precautions.

Wheels and Tires

WARNING: Do not mix different types of tires, such as radial, bias or bias-belted, on the same vehicle except in emergencies. Vehicle handling can be seriously affected and can result in loss of control. Failure to follow these instructions may result in personal injury.

Factory-installed wheels and tires are designed to operate satisfactorily with loads up to and including full-rated load capacity when inflated to recommended inflation pressures.

DIAGNOSTIC TESTS

WHEELS AND TIRES

Special Tools

Illustration	Tool Name	Tool Number
 ST2869-A	Digital Tire Gauge	204-354

Inspection and Verification

WARNING: Vehicle may have multiple drive wheels. Do not use engine to power the driveline unless all drive wheels are elevated off the ground. Drive wheels in contact with ground could cause unexpected vehicle movement. Failure to follow this instruction may result in serious personal injury.

Be sure to follow all warnings when carrying out Inspection and Verification.

Road Test

Verify the customer concern by carrying out a road test on a smooth road. If any vibrations are apparent, go to **Symptom Chart - Noise, Vibration and Harshness (NVH)**.

To maximize tire performance, inspect for signs of incorrect inflation and uneven wear, which may indicate a need for balancing, rotation or front suspension alignment.

Correct tire pressure and driving techniques have an important influence on tire life. Heavy cornering, excessively rapid acceleration and unnecessary sharp braking increase tire wear.

Replacement tires must follow the recommended:

- tire sizes.
- speed rating.
- load range.
- tire construction type.

The use of any other tire/wheel size or type can seriously affect:

- ride.
- handling.
- speedometer/odometer calibration.
- vehicle ground clearance.
- tire clearance between the body and chassis.
- wheel bearing life.

- brake cooling.

New wheels need to be installed when the vehicle's wheels:

- are bent.
- are cracked.
- are dented.
- are heavily corroded.
- are leaking.
- have elongated wheel hub bolt holes.
- have excessive lateral or radial runout.

It is mandatory to use only the tire sizes recommended on the tire chart attached to the vehicle. Larger or smaller tires can damage the vehicle, affect durability and require changing the speedometer calibration. Make sure wheel size and offsets match those recommended for the tire in use.

1. Inspect the tires for signs of uneven wear. Refer to the following descriptions to identify the type of wear and Go to **Symptom Chart - Tire Wear** for the appropriate repair action to be carried out.
2. Check the tires for:
    - cuts.
    - stone bruises.
    - abrasions.
    - blisters.
    - embedded objects.
3. Tread wear indicators are molded into the bottom of the tread grooves. Install a new tire when the indicator bands become visible.

Tire Wear

Tire wear is commonly defined as a loss of tread depth. Tire tread wear occurs due to friction with the contact surface (road/pavement). The tread should wear down uniformly all the way around the circumference of the tire and all the way across the tread face. When this does not occur, the tire may have abnormal/incorrect wear.

Normal Tire Wear

Normal tire wear is identified as even wear around and across the tread. Because there are many factors (driving style, road surfaces, type of vehicle, type of tire) that can affect tire wear, there is no absolute mileage expectation for a normal wear condition. A tire is considered worn-out when the tread has worn to the level of the tread-wear indicators.

Abnormal/Incorrect Tire Wear

Abnormal/incorrect tire wear is identified as tire wear that is not even around or across the tread and that creates performance-related issues.

Abnormal/incorrect wear can be caused by numerous factors, some of which include driving style (aggressive, passive), climate (hot, cold), road conditions, vehicle loading and maintenance. It is important to determine the root cause of wear on a vehicle before carrying out repair. Tires exhibiting abnormal/incorrect tire wear may still be serviceable provided that the minimum tread depth is greater than 1.58 mm (2/32 in) and the tire is not causing a vehicle performance (noise/vibration) concern.

Some abnormal/incorrect wear patterns look the same all the way around the tread of the tire, other wear patterns are not consistent and can occur in various spots on the tread area. The underlying causes of the 6 wear categories are different. Refer to the following descriptions to identify the type of wear and Go to **Symptom Chart - Tire Wear** for the appropriate repair action to be carried out.

Inner Edge/Shoulder Wear

Inner edge (or shoulder) wear occurs on the inside edge of the tire and is usually caused by excessive toe-out and/or excessive negative camber. If the tread depth of the outer shoulder is at least 50% greater than the tread depth of the inner shoulder, the tire is experiencing inner edge/shoulder wear. To determine whether tires have this type of wear, visually inspect the tires. In some instances, you may need to measure the tread depth of each rib and compare it to that of the shoulder.

NOTE: RF tire shown, others similar.

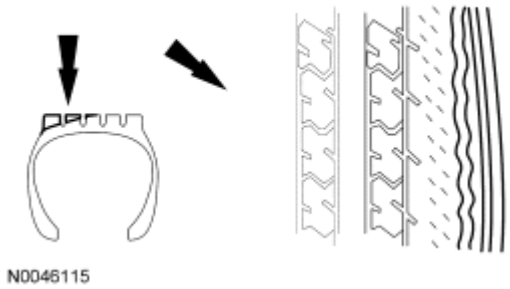

Fig. 1: Identifying Inner Edge/Shoulder Wear
Courtesy of FORD MOTOR CO.

Outer Edge/Shoulder Wear

Outer edge (or shoulder) wear occurs on the outside edge of the tire and is usually caused by excessive toe-in and/or excessive positive camber. If the tread depth of the inner shoulder is at least 50% greater than the tread depth of the outer shoulder, the tire is experiencing outer edge/shoulder wear. To determine whether tires have this type of wear, visually inspect the tires. In some instances, you may need to measure the tread depth of each rib and compare it to that of the shoulder.

NOTE: RF tire shown, others similar.

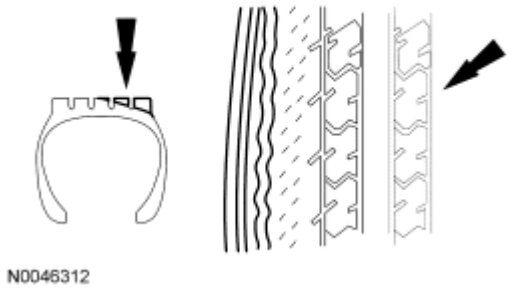

Fig. 2: Identifying Outer Edge/Shoulder Wear
Courtesy of FORD MOTOR CO.

Heel/Toe Wear

Heel/toe wear (also known as feathering) occurs along the outside or inside edge/shoulder of the tire. To determine whether tires have this type of wear, visually inspect the tires in both the inside and outside shoulder ribs. In some instances, you may need to measure the difference in tread depth of leading versus trailing edge of each lug in the inside and outside shoulder rib.

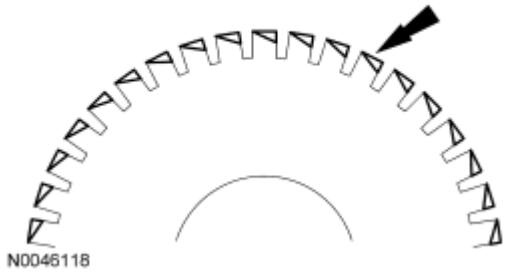

Fig. 3: Identifying Heel/Toe Wear
Courtesy of FORD MOTOR CO.

Diagonal Wear

Diagonal wear occurs diagonally across the tread area and around the circumference of the tire. To determine whether tires have this type of wear, visually inspect the tires to determine if the wear pattern runs diagonally across the tread and around the circumference of the tire. In some instances, you may need to measure the difference in tread depth along the diagonal wear pattern.

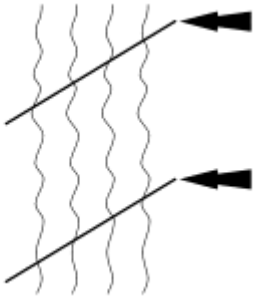

Fig. 4: Identifying Diagonal Wear
Courtesy of FORD MOTOR CO.

Symptom Chart - Tire Wear

Symptom Chart - Tire Wear

Condition	Possible Sources	Action
• Inner edge/shoulder wear	• Excessive toe-out and/or negative camber	• Go to **Pinpoint Test A**.
	• Incorrect wheel and tire assembly rotation intervals	• Go to **Pinpoint Test A**.
	• High-speed cornering	• Go to **Pinpoint Test A**.
• Outer edge/shoulder wear	• Excessive toe-in and/or positive camber	• Go to **Pinpoint Test B**.
	• Incorrect wheel and tire assembly rotation intervals	• Go to **Pinpoint Test B**.
	• High-speed cornering	• Go to **Pinpoint Test B**.
• Heel/toe wear	• Excessive toe-in/out • Incorrect wheel and tire assembly rotation intervals	• ROTATE the wheel and tire assemblies. CHECK the alignment, ADJUST as necessary.
• Diagonal wear	• Excessive toe-in/out	• Go to **Pinpoint Test C**.
	• Incorrect tire rotation intervals	• Go to **Pinpoint Test C**.
	• Loose, worn or damaged suspension components	• REFER to **SUSPENSION SYSTEM - GENERAL INFORMATION** article.

Symptom Chart - Noise Vibration and Harshness (NVH)

NOTE: Noise, vibration and harshness (NVH) symptoms should be identified using the

diagnostic tools that are available. For a list of these tools, an explanation of their uses and a glossary of common terms, refer to NOISE, VIBRATION AND HARSHNESS article. Since it is possible any one of multiple systems may be the cause of a symptom, it may be necessary to use a process of elimination type of diagnostic approach to pinpoint the responsible system. If this is not the causal system for the symptom, refer back to NOISE, VIBRATION AND HARSHNESS article for the next likely system and continue diagnosis.

Symptom Chart - Noise Vibration and Harshness (NVH)

Condition	Possible Sources	Action
• Wobble or shimmy	• Bent wheel • Damaged tire • Loose wheel nuts	• INSTALL a new wheel as necessary. • INSTALL a new tire as necessary. • TIGHTEN to specification.
• High-speed shake	• Tires/wheels	• REFER to Wheel and Tire Runout Component Test.
• Vehicle vibration	• Tires/wheels	• REFER to Wheel and Tire Runout Component Test.

Pinpoint Tests

For a description of the various tire wear patterns, refer to Inspection and Verification.

Pinpoint Test A: Inner Edge/Shoulder Wear

This pinpoint test is intended to diagnose the following:

- Excessive toe-out
- Incorrect wheel and tire rotation

PINPOINT TEST A: INNER EDGE/SHOULDER WEAR

A1 MEASURE THE TREAD DEPTH

- Using a tread depth gauge or similar tool, measure the inside edge/shoulder tread depth.
- **Is the tread depth greater than 1.58 mm (2/32 in)?**

  YES : ROTATE the wheel and tire assemblies.

  CHECK and ADJUST the toe to nominal +0.15 degree (toe-in). CHECK and ADJUST caster and camber to nominal. REFER to **SUSPENSION SYSTEM - GENERAL INFORMATION** article.

  NO : INSTALL a new tire(s).

  CHECK and ADJUST the toe to nominal. CHECK and ADJUST caster and camber to nominal.

REFER to **SUSPENSION SYSTEM - GENERAL INFORMATION** article.

Pinpoint Test B: Outer Edge/Shoulder Wear

This pinpoint test is intended to diagnose the following:

- Excessive toe-in
- Incorrect wheel and tire rotation

PINPOINT TEST B: OUTER EDGE/SHOULDER WEAR

B1 MEASURE THE TREAD DEPTH

- Using a tread depth gauge or similar tool, measure the outside edge/shoulder tread depth.
- **Is the tread depth greater than 1.58 mm (2/32 in)?**

  YES : ROTATE the wheel and tire assemblies.

  CHECK and ADJUST the toe to nominal -0.15 degree (toe-out). CHECK and ADJUST caster and camber to nominal. REFER to **SUSPENSION SYSTEM - GENERAL INFORMATION** article.

  NO : INSTALL a new tire(s).

  CHECK and ADJUST the toe to nominal. CHECK and ADJUST caster and camber to nominal. REFER to **SUSPENSION SYSTEM - GENERAL INFORMATION** article.

Pinpoint Test C: Diagonal Wear

This pinpoint test is intended to diagnose the following:

- Incorrect wheel and tire rotation
- Excessive toe-in/out
- Incorrect tire inflation
- Loose, worn or damaged suspension components

PINPOINT TEST C: DIAGONAL WEAR

C1 MEASURE THE TREAD DEPTH

- Using a tread depth gauge or similar tool, measure the tread depth of the wear pattern.
- **Is the tread depth greater than 1.58 mm (2/32 in)?**

  YES : If no performance concerns (noise/vibration) are present, the tire can remain in service.

  CHECK the air pressure in the tires, ADJUST as necessary.

  ROTATE the wheel and tire assemblies.

  INSPECT for loose, worn or damaged suspension components. INSTALL new components as

necessary.

CHECK the alignment and ADJUST as necessary. REFER to **SUSPENSION SYSTEM - GENERAL INFORMATION** article.

NO : INSTALL a new tire(s).

CHECK the air pressure in the tires, ADJUST as necessary.

ROTATE the wheel and tire assemblies.

INSPECT for loose, worn or damaged suspension components. INSTALL new components as necessary.

CHECK the alignment and ADJUST as necessary. REFER to **SUSPENSION SYSTEM - GENERAL INFORMATION** article.

Component Tests

Some vehicles may exhibit a wheel and tire vibration caused by excessive runout. Runout measurements of the wheel and tire assembly can be taken both on and off the vehicle. Runout measurements can be taken both radially and laterally using a runout gauge. The runout gauge is a delicate, precision instrument and should be handled as such. The runout gauge should be mounted on a heavy solid base to eliminate gauge movement when measuring runouts. The measurements are taken using a runout gauge, which defines total runout in 64th or thousandths of an inch (depending on the brand of gauge used) and locates the high and low points of the runout.

Radial Runout

Radial runout is the egg-shaped deviation from a perfect circle and is measured perpendicular on a circumference. On a wheel and tire assembly this usually means measuring the center tire tread rib, although other tread ribs can be measured as well. The center rib is usually a solid rib, easy to measure and normally indicative of the condition of the tire as a whole. It is important to keep in mind that any rib with excessive runout can cause a concern. Total runout is the reading from the gauge. The high spot is the location of maximum runout.

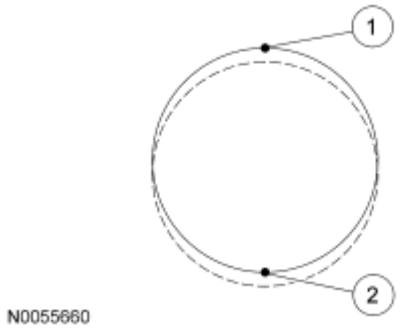

Fig. 5: Identifying Radial Runout

Courtesy of FORD MOTOR CO.

Item	Part Number	Description
1	-	High spot
2	-	Low spot

NOTE: Warm up the tires prior to taking any measurements, this will eliminate slight flat spotting. This is done during a road test.

CAUTION: Place the air chuck straight on the valve stem to inflate the tire. Do not cock the air chuck during the inflation cycle. Doing so may damage the valve stem and cause air leaks.

1. Make sure that the tire pressures are set to the correct pressure as indicated on the vehicle label.
2. With the vehicle in NEUTRAL, position it on a hoist. Refer to **NOISE, VIBRATION AND HARSHNESS** article.
3. Make sure that all 4 positions can be measured. If measurements are to be taken with the wheel and tire assembly off the vehicle, mount each assembly on a suitable dynamic balancing machine.
4. For future reference of the original wheel and tire assembly's position on the wheel hub, index-mark the wheel and a wheel stud.
5. Position the runout gauge to take a radial measurement.
   - Rotate the wheel and tire assembly (or wheel) to locate the low spot.
   - Adjust the runout gauge to read 0.
   - Rotate the wheel and tire assembly (or wheel) one complete revolution to make sure that the low spot has been found and that the runout gauge dial returns to a 0 reading.

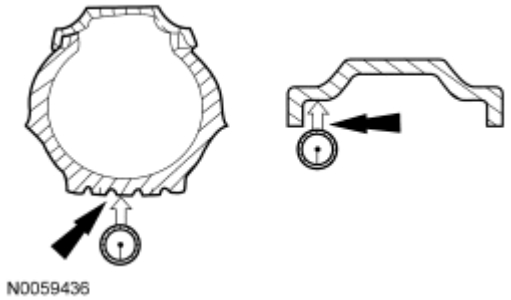

Fig. 6: Measuring Radial Runout
Courtesy of FORD MOTOR CO.

NOTE: If there is a vast difference in measurements taken from a wheel and tire assembly checked (on the vehicle) compared to readings taken (off the vehicle), check for excessive bolt circle runout, excessive hub runout or a fitting concern between the hub and wheel.

6. While slowly and constantly rotating the wheel and tire assembly (or wheel), measure the radial runout.
   - Note the variance (runout) from 0 on the dial of the gauge.
   - If the runout reading of a wheel and tire assembly is not within 1.27 mm (0.050 in), locate and mark the high spot and proceed to Match Mounting, Step 1 to correct the concern.
   - If the runout reading of a wheel is not within 1.27 mm (0.050 in), install a new wheel.

Lateral Runout

Lateral runout is a sideways variation causing a twist or wobble and is measured on a side surface. On the wheel and tire assembly, the lateral runout measurement should be taken as close to the tread shoulder as possible. Total runout is the reading from the gauge.

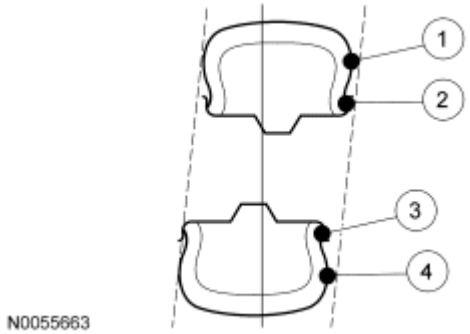

Fig. 7: Identifying Lateral Runout
Courtesy of FORD MOTOR CO.

Item	Part Number	Description
1	-	Tire high spot
2	-	Wheel high spot
3	-	Tire low spot
4	-	Wheel low spot

1. Position the runout gauge to take a lateral measurement.
   - Rotate the wheel and tire assembly (or wheel) to locate the low spot.
   - Adjust the runout gauge to read 0.
   - Rotate the wheel and tire assembly (or wheel) one complete revolution to make sure that the low spot has been found and that the dial returns to a 0 reading.

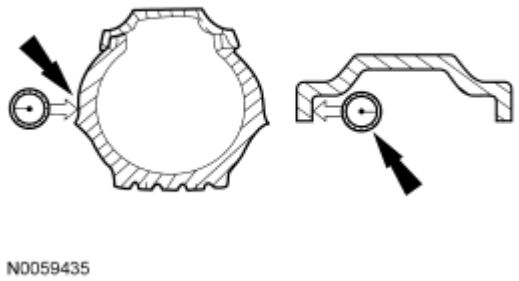

Fig. 8: Measuring Lateral Runout
Courtesy of FORD MOTOR CO.

NOTE: **If there is a vast difference in measurements taken from a wheel and tire assembly checked (on the vehicle) compared to readings taken (off the vehicle), check for excessive bolt circle runout, excessive hub runout or a fitting concern between the hub and wheel.**

2. While slowly and constantly rotating the wheel and tire assembly (or wheel), measure the lateral runout.
   - Note the variance (runout) from 0 on the dial of the gauge.
   - If the runout reading of a wheel and tire assembly is not within 1.27 mm (0.050 in), locate and mark the high spot and proceed to Match Mounting, Step 1 to correct the concern.
   - If the runout reading of a wheel is not within 1.27 mm (0.050 in), install a new wheel.

Match Mounting

Match mounting is a technique used to reduce radial and lateral runouts on wheel and tire assemblies. Excessive runout is a source of ride quality complaints and match mounting can be used to minimize the runout. Match mounting can be accomplished by changing the position of the tire on the wheel or by changing the position of the wheel and tire assembly on the hub.

1. Remove the wheel and tire. Refer to **Wheel and Tire**.
2. Position the wheel and tire assembly on a suitable tire machine and put a reference mark on the tire sidewall at the valve stem position.

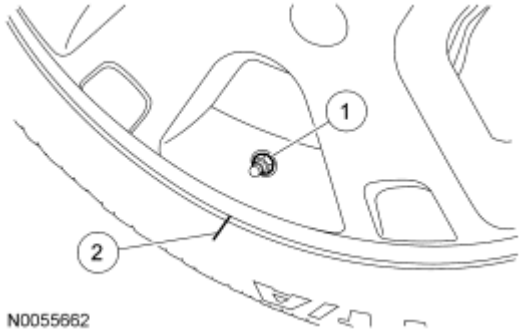

Fig. 9: Locating Mark On Tire Side Wall At Valve Stem Position

Courtesy of FORD MOTOR CO.

Item	Part Number	Description
1	-	Valve stem
2	-	Reference mark

CAUTION: For tires equipped with a tire pressure monitoring system (TPMS), the sensor, cradle and strap can be damaged by incorrect tire mounting or dismounting. Dismount the tire from the wheel as instructed in the Disassembly and Assembly procedure. Failure to follow these instructions may result in TPMS component damage.

3. Using a suitable tire machine, break the tire down from the wheel.
   - Position the tire 180 degrees (half-way around) on the rim so the tire reference mark made in Step 2 is opposite the valve stem.
4. Re-inflate the wheel and tire assembly to the specified air pressure and measure the assembly runout again. Mark the second high spot on the tire.
   - If the runout is reduced to within specifications, the problem has been solved.
5. If the second runout measurement is still not within specification and both measurements are close to each other (within 101.6 mm [4 in]), the root cause is probably the tire.

NOTE: To be SURE that the tire is causing the high runout, you must have 2 runout measurements that are not within specification and the high spots must be in approximately the same location on the tire's sidewall. In other words, the high spot followed the tire when it was repositioned 180 degrees on the wheel.

- If the second high spot is not within 101.6 mm (4 in) of the first high spot, proceed to the next step.

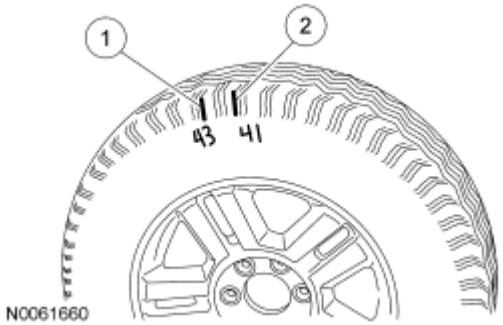

Fig. 10: High Spotting On Tire
Courtesy of FORD MOTOR CO.

Item	Part Number	Description

1	-	First high spot on the tire
2	-	Second high spot on the tire

6. If the second high spot is still above specification and is within 101.6 mm (4 in) of being opposite the first high spot on the wheel, the root cause is probably the wheel (the high spot followed the wheel). Dismount the tire from the wheel, mount the wheel on a balancer and check the wheel runout. Install a new wheel if the wheel runout exceeds 1.27 mm (0.05 in).

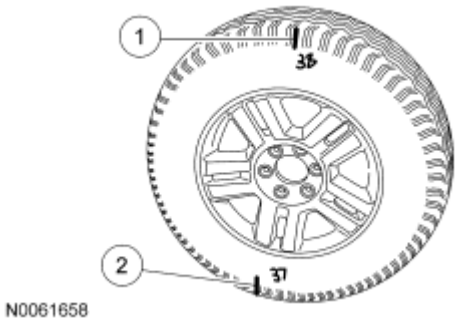

Fig. 11: High Spotting On Each End Of Tire
Courtesy of FORD MOTOR CO.

Item	Part Number	Description
1	-	First high spot on the tire
2	-	Second high spot on the tire

NOTE: **If the second high spot did not follow the wheel or the tire and the runout is still not within specification, you may make improvements by rotating the tire 90 degrees (1/4 of a turn).**

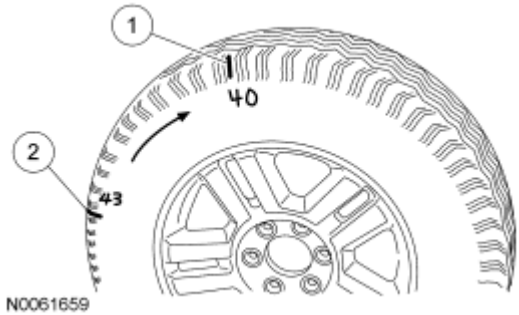

Fig. 12: Drawing Arrow On Tire Side Wall From Second High Spot Towards First High Spot
Courtesy of FORD MOTOR CO.

7. Draw an arrow on the tire sidewall from the second high spot towards the first high spot (in the shortest direction).
   - Rotate the tire 90 degrees (1/4 of a turn) in the direction of the arrow.

Item	Part Number	Description
1	-	First high spot on the tire
2	-	Second high spot on the tire

8. Install the wheel and tire. Refer to **Wheel and Tire**.
   - Align the wheel and tire assembly using the index mark made on the wheel and wheel stud during removal.

GENERAL PROCEDURES

WHEEL LEAKS

WARNING: **Wheel repairs that use welding or peening are not approved. An inner tube is not an acceptable repair for leaking wheels or tires.**

If the air pressure in a tire mounted on an aluminum wheel is found to be low, perform the following procedure. Failure to follow these instructions may result in personal injury.

1. Remove the tire and wheel assembly and inspect the wheel for structural damage. If the wheel is damaged, install a new wheel.

REMOVAL AND INSTALLATION

WHEEL AND TIRE

Material

Item	Specification
Silicone Brake Caliper Grease and Dielectric Compound XG-3-A	ESE-M1C171-A

REMOVAL

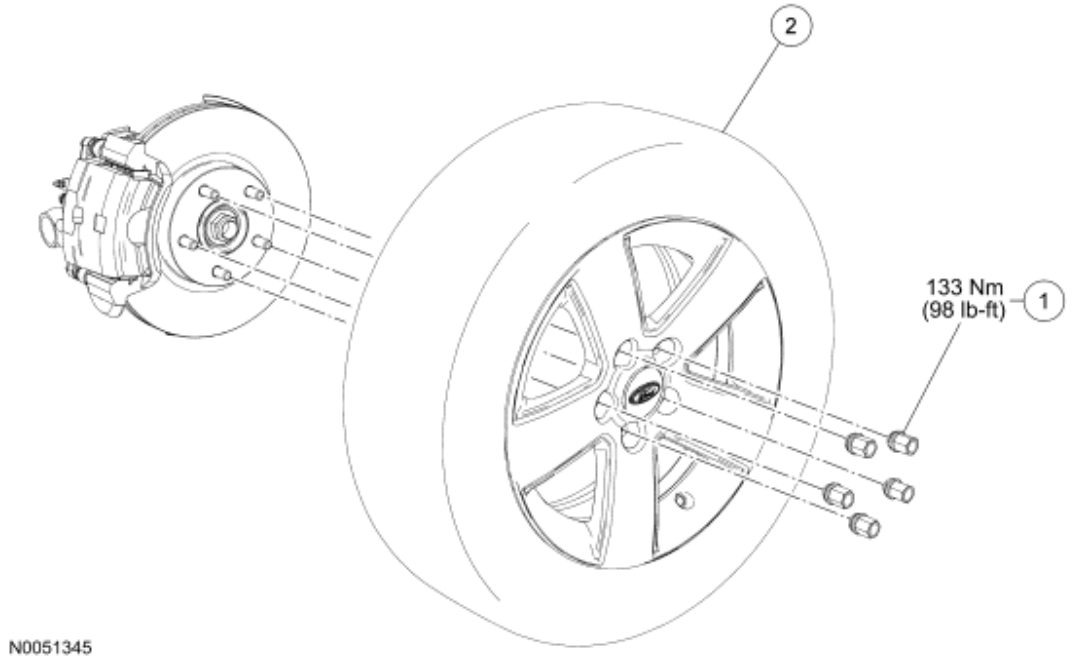

Fig. 13: Exploded View Of Wheel & Tire (With Torque Specifications)
Courtesy of FORD MOTOR CO.

Item	Part Number	Description
1	1012	Wheel nut (5 required)
2	-	Wheel and tire assembly

CAUTION: Do not use heat to loosen a seized wheel nut. Heat can damage the wheel and wheel bearings.

NOTE: To avoid damage or scratching the center cap, place facing up when removed.

1. If equipped, remove the center cap or wheel cover.
2. With the weight of the vehicle on the wheels, loosen the wheel nuts.
3. With the vehicle in NEUTRAL, position it on a hoist. For additional information, refer to **JACKING AND LIFTING** article.
4. Remove the wheel nuts and the wheel and tire assembly.

NOTE: Corrosion buildup can result in wheels sticking to the front brake disc flange/rear hub flange after extensive service.

5. Use the following procedure to prevent the sticking condition from recurring once the wheels are

removed.

- Clean the brake disc flange/hub flange and wheel bore of corrosion with a wire brush, steel wool or any other suitable material.
- Coat the wheel bore with a thin layer of grease. Do not apply grease to wheel hub bolt nut seats or the wheel stud.

INSTALLATION

WARNING: When a wheel is installed, always remove any corrosion, dirt or foreign material present on the mounting surfaces of the wheel or the surface of the wheel hub, brake drum or brake disc that contacts the wheel. Installing wheels without correct metal-to-metal contact at the wheel mounting surfaces can cause the wheel nuts to loosen and the wheel to come off while the vehicle is in motion, causing loss of control. Failure to follow these instructions may result in personal injury.

1. To install, position the wheel and tire assembly on the vehicle.

CAUTION: Failure to tighten the wheel nuts in a star pattern can result in high brake disc runout, which will speed up the development of brake roughness, shudder and vibration.

NOTE: Aluminum wheels require a special bulge-type wheel nut with enlarged chamfer to prevent distortion of the wheel hub bolt nut seat.

2. Install the wheel nuts hand-tight, then lower the vehicle.
   - Tighten the wheel nuts to 133 Nm (98 lb-ft) in a star-pattern sequence.

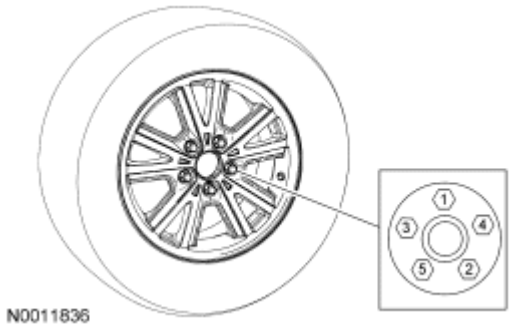

Fig. 14: Identifying Wheel Nut Tightening Sequence
Courtesy of FORD MOTOR CO.

3. If removed, install the center cap or wheel cover.